Laser Power Measurement Spheres

Collecting the total radiant power emitted by highly divergent or collimated sources

LASER POWER MEASUREMENT SPHERES

VALUE

Results independent of beam geometry up to 40° half angle

Efficiently collects total power from highly divergent sources

Ability to mount two different detectors or spectrometers simultaneously

Attenuates the signal to avoid detector saturation

APPLICATIONS

Laser and laser diode output characterization

Optical bench detection

LIQUID-COOLED LASER POWER MEASUREMENT SPHERES

VALUE

Efficient heat removal system for high power laser measurements

A laser target included with sphere to disperse the source energy

Type of coolant can be chosen by the user

Attenuates the signal to avoid the detector's saturation

APPLICATIONS

High power infrared lasers, CO_2 lasers and Nd:YAG lasers output characterization

High power laser diode stacks testing

Accurate

Independent of beam geometry and without the need for auxiliary optics, Labsphere's Laser Power Measurement Spheres are ideal for collecting the total radiant power emitted by highly divergent sources, such as laser diodes as well as a collimated laser beam. Accurate, repeatable measurements may be performed quickly and easily without painstaking positioning and alignment procedures. Integrating sphere measurements of laser power also eliminate polarization effects often associated with filter attenuation techniques.

Easy to use

Labsphere's Laser Power Measurement Spheres are offered for applications in the wavelength regions from UV-VIS-NIR to the NIR-MIR. Each laser power measurement sphere is designed to accommodate any standard Labsphere detector assemblies.

The spheres include two statically placed detector ports. Users can mount two detectors simultaneously to measure laser sources with difference in output wavelength. The sphere can also be used for laser characterization by mounting a photodetector on one port and a spectrometer on the other.

A laser target fits into a port opposite the input beam and is designed to receive the first strike from the laser and disperse its energy into the sphere. Each assembly for the liquid-cooled laser power measurement spheres has two 0.25 inch NPT fittings to interface to the cooling system.

Normal tap water or a refrigerated coolant such as ethylene glycol may be used as a coolant. If a recirculator is used, consult the manufacturer as to the choice of coolant. The measurement devise is ideal for output measurements from CO_2, Nd:YAG, and other infrared lasers with power density less than 2 kW/cm^2. The maximum coolant pressure is 15 psi. and the relief valves lifts at 35 psi. Pressure limitation and the coolant outlet temperature should be considered when selecting a coolant base.

Labsphere's Liquid-cooled Laser Power Measurement Spheres include three sizes of liquid- cooled integrating spheres, designed for performing power measurements of high power pulsed and continuous wave lasers. Coated with Infragold® high reflectance coating for measurements over the 700 nm - 20 µm wavelength range, the liquid-cooled design can handle a maximum power density of 2 kw/cm^2 (CW for 1 second exposure at 10.6 µm) while greatly reducing the self emission that would result from an uncooled sphere.

Labsphere, Inc. • 231 Shaker St. • North Sutton, NH 03260 • USA • Tel: +1 (603) 927-4266 • www.labsphere.com
PB-14008-000 Rev.00
© 2015 Labsphere, Inc. All rights reserved.

Specifications

Model Number	Order Number
3P-LPM-020-IG	AS-02490-001
3P-LPM-020-SF	AS-02489-001
3P-LPM-020-SL	AS-02488-001
3P-LPM-040-IG	AS-02496-001
3P-LPM-040-SF	AS-02492-001
3P-LPM-040-SL	AS-02491-001
3P-LPM-060-IG	AS-02497-001
3P-LPM-060-SF	AS-02495-001
3P-LPM-060-SL	AS-02493-001
LPM-060-IGC	AA-00029-120
LPM-080-IGC	AA-00029-220

	LPM-XXX-SL	LPM-XXX-SF	LPM-XXX-IG	LPM-060-IGC	LPM-080-IGC
Sphere Diameters, respectively:	2, 4, 6 inch	2, 4, 6 inch	2, 4, 6 inch	6 inch	8 inch
Input Aperture Diameters, respectively:	0.5, 1, 1 inch	0.5, 1, 1 inch	0.5, 1, 1 inch	1 inch	2 inch
Sphere Material/Coating:	Spectralon®	Spectraflect®	Infragold®	Infragold®	Infragold®
Optimum Spectral Range:	250 - 2500 nm	350 to 1800 nm	700 nm - 20 µm	700 nm - 20 µm	700 nm - 20 µm

LPM-XXX-IG

The LPM-XXX-IG Laser Power Measurement Sphere is coated with Infragold® diffuse reflective coating, which exhibits high reflectance values (93%–96%) over the NIR-MIR wavelength region.

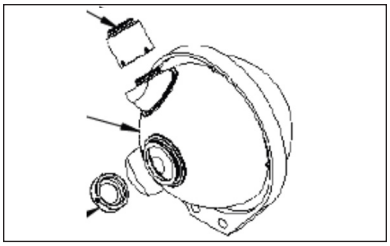

LPM-XXX-SF

The LPM-XXX-SF Laser Power Measurement Spheres are integrating spheres designed for the measurement of lasers and laser diodes in the UV-VIS-NIR spectral region. The interior of the sphere is coated with Spectraflect®, a diffuse white coating applicable over the spectral range of 350 to 1800 nm.

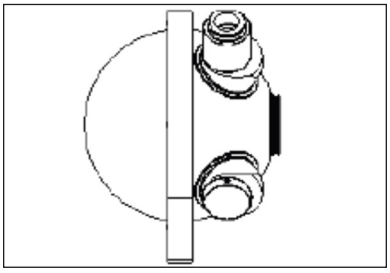

LPM-XXX-SL

The LPM-XXX-SL Laser Power Measurement Spheres are integrating spheres designed for the measurement of lasers and laser diodes in the UV-VIS-NIR spectral region (300 - 1800 nm). The interior of the sphere is machined from Spectralon®, a thermoplastic resin with reflectance of approximately 99% over the spectral range of 400 to 1500 nm, and > 95% from 250 to 2500 nm.

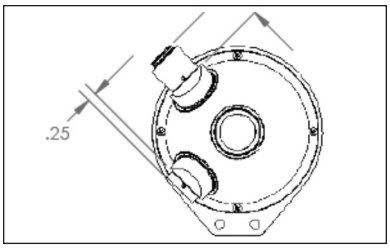

LPM-060-IGC AND LPM-080-IGC

The LPM-060-IGC and LPM-080-IGC Liquid-cooled Integrating Spheres are designed for performing power measurements of high power pulsed and continuous wave lasers. Coated with Infragold® high reflectance coating for measurements over the 700 nm – 20 µm wavelength range, the liquid-cooled design can handle a maximum power density of 2 kw/cm^2.

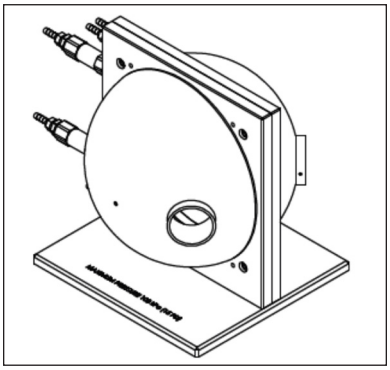

© 2015 Labsphere, Inc. All rights reserved.